WIRING FOR ONE CONTROL PANEL TO 16 POWER BOXES.

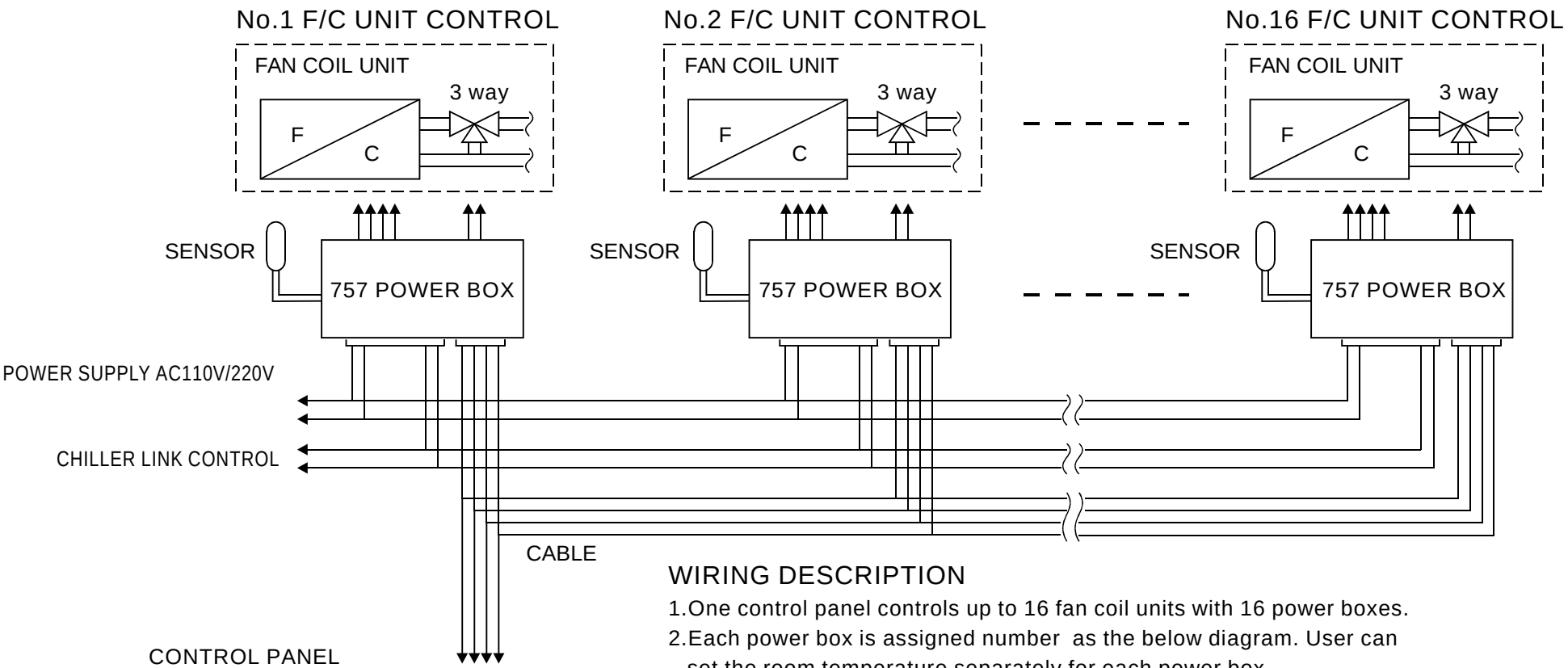

CONTROL PANEL

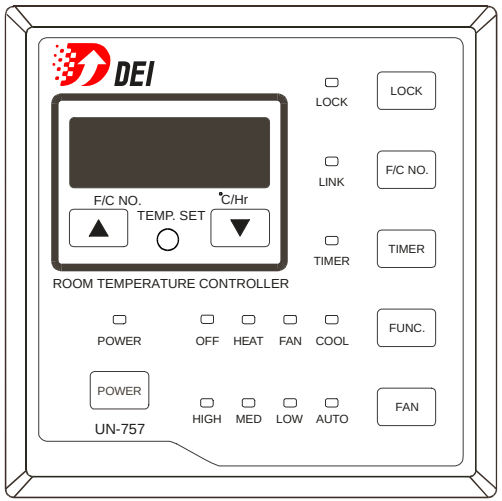

WIRING DESCRIPTION
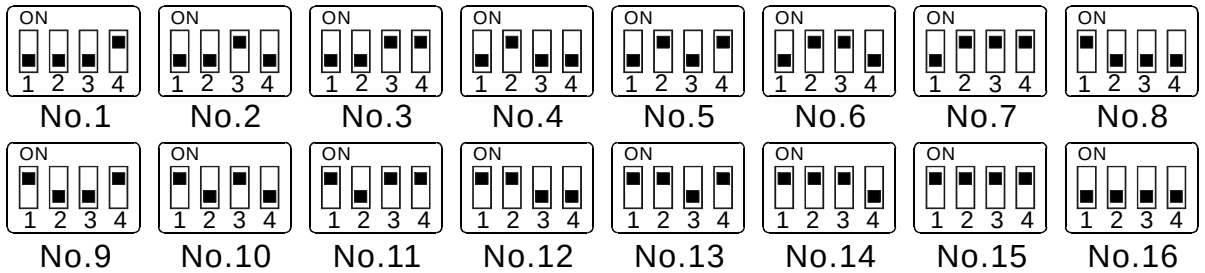
1. One control panel controls up to 16 fan coil units with 16 power boxes.
2. Each power box is assigned number as the below diagram. User can set the room temperature separately for each power box..
3. Please install sensor arroud fan outlet.
4. The max. Length of connecting cable is 100M.
5. Each power box contains one sonsor and program, which stables the Room temperature of each fan outlet.